WHEEL MOTORS AND BRAKES

HWM SERIES

TECHNICAL DATA

	Displacement	Piston diameter	Shaft stroke	Specific torque	Peak pressure	Peak speed	Peak power	Weight	
								+B30	+H30
	cm^3/rev	mm	mm	Nm/bar	bar	rpm	kW	kg	
HWM 100 A	99	28	32	1,58	425	1.000	48	44	36
HWM 115 A	115	35	24	1,83	400	1.000	48	44	36
HWM 130 A	129	37	24	2,05	400	1.000	48	44	36
HWM 155 A	154	35	32	2,45	400	1.000	48	44	36
HWM 175 A	172	37	32	2,74	375	900	48	44	36
HWM 200 A	201	40	32	3,20	350	800	48	44	36
HWM 220 A	221	42	32	3,50	350	700	48	44	36
HWM 250 A	243	44	32	3,87	350	700	48	44	36
HWM 300 A	290	48	32	4,62	300	650	48	44	36

B30 BRAKE

Max. static braking torque	Max. cylinder pressure	Pressure max. cable force
Nm	mm	N
200	100	1.800

The brake is supplied with cable (standard) for emergency/parking brake and with cylinder for dynamic brake.

DRAWINGS

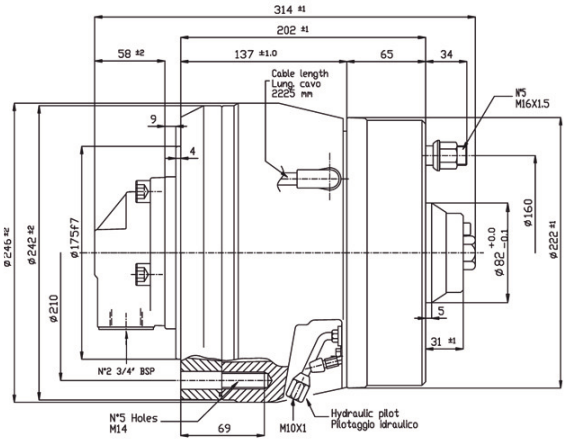

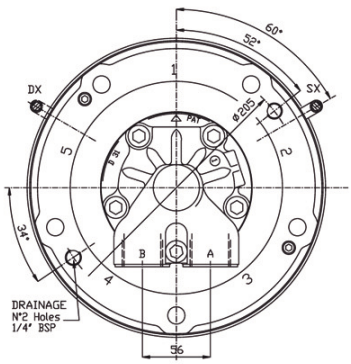

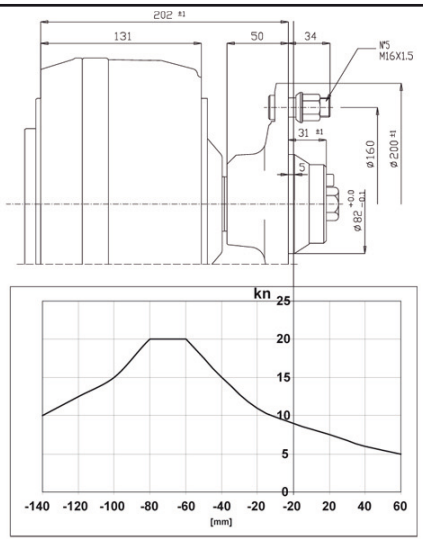

HYDROMOBIL
HYDROSTATIC TRANSMISSIONS
tel. +39 0536.194.55.60
fax +39 0536.194.02.80
www.hydromobil.it
info@hydromobil.it